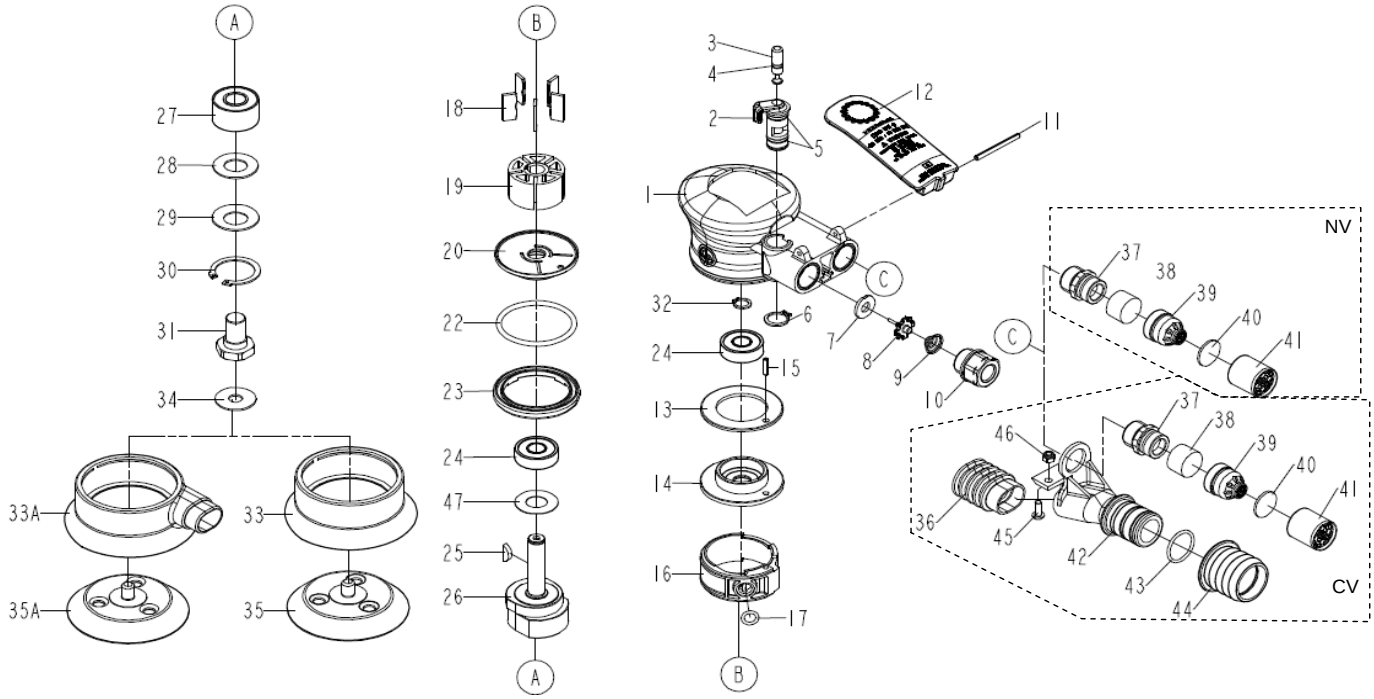

No.	Part No.	Description	Qty
1	8940167195	Housing Assembly for CP7225-3 series (2,5mm Orb.)	1
	8940167196	Housing Assembly for CP7255-3 series (5mm Orb.)	1
2	8940163401	Regulator	1
3	8940163402	Valve Stem	1
4	8940163403	O-Ring	1
5	8940163404	O-Ring	2
6	8940163405	S-Ring	1
7	8940163406	Seal	1
8	8940163407	Tip Valve	1
9	8940163408	Conical Spring	1
10	8940163409	Air Inlet	1
11	8940163494	Spring Pin	1
12	8940163410	Lever for CP7225-3 series (2,5mm Orb.)	1
	8940163411	Lever for CP7255-3 series (5mm Orb.)	1
13	8940163413	Front Ring	1
14	8940163415	Front End Plate	1
15	8940163436	Spring Pin	1
16	8940163418	Cylinder	1
17	8940163435	O-Ring	1
18	8940163417	Blade Set (5)	1
19	8940163416	Rotor	1
20	8940163414	Rear End Plate	1
22	8940163420	O-Ring	1
23	8940163421	Lock Ring	1
24	8940163419	Bearing	2
25	8940163425	Rotor Key	1
26	8940167197	Motor Shaft Balancer for CP7225-3 series (2,5mm Orb.)	1
	8940167198	Motor Shaft Balancer CP7255-3 series (5mm Orb.)	1
27	8940163426	Bearing	1
28	8940163433	Bearing Seal	1
29	8940163427	Bearing Shield	1
30	8940163432	Snap Ring	1

No.	Part No.	Description	Qty
31	8940167199	Balancer Shaft	1
32	8940163428	Snap Ring	1
33	8940167200	Skirt	1
	8940167201	Skirt (for CV)	1
34	8940167202	Heat Isolation Washer	1
35	8940167203	3" (75mm) Pad PSA w/o hole	1
	8940167204	3" (75mm) Pad H&L w/o hole	1
36	8940167207	Vacuum Hose (for CV)	1
37	8940163438	Muffler Screw	1
38	8940167276	Muffler	1
39	8940163442	Nozzle	1
40	8940167277	Muffler	1
41	8940163446	Muffler Cap	1
42	8940163448	Vacuum Adapter (for CV)	1
43	8940163449	O-Ring (for CV)	1
44	8940163450	Revolving Connector (for CV)	1
45	8940163451	Screw (for CV)	1
46	8940163452	U nut (for CV)	1
47	8940167219	Anti dust washer	1
	8940163525	Pad wrench (not shown)	1
	6157812930	Warning label	1

Tune-up kit
8940163459 (incl: 7, 17, 18, 22, 24, 25, 32, 47)
Maintenance kit
8940163460 (wrenches for pad, motor kit & lock ring)
Hose adaptators for CV palm sanders
6153501170 Vaccum hose adaptator ø25 (1") / ø32 (1 1/4")
6158044480 Vaccum hose adaptator ø25 (1") / ø28 (1 1/8")